LÖNSET

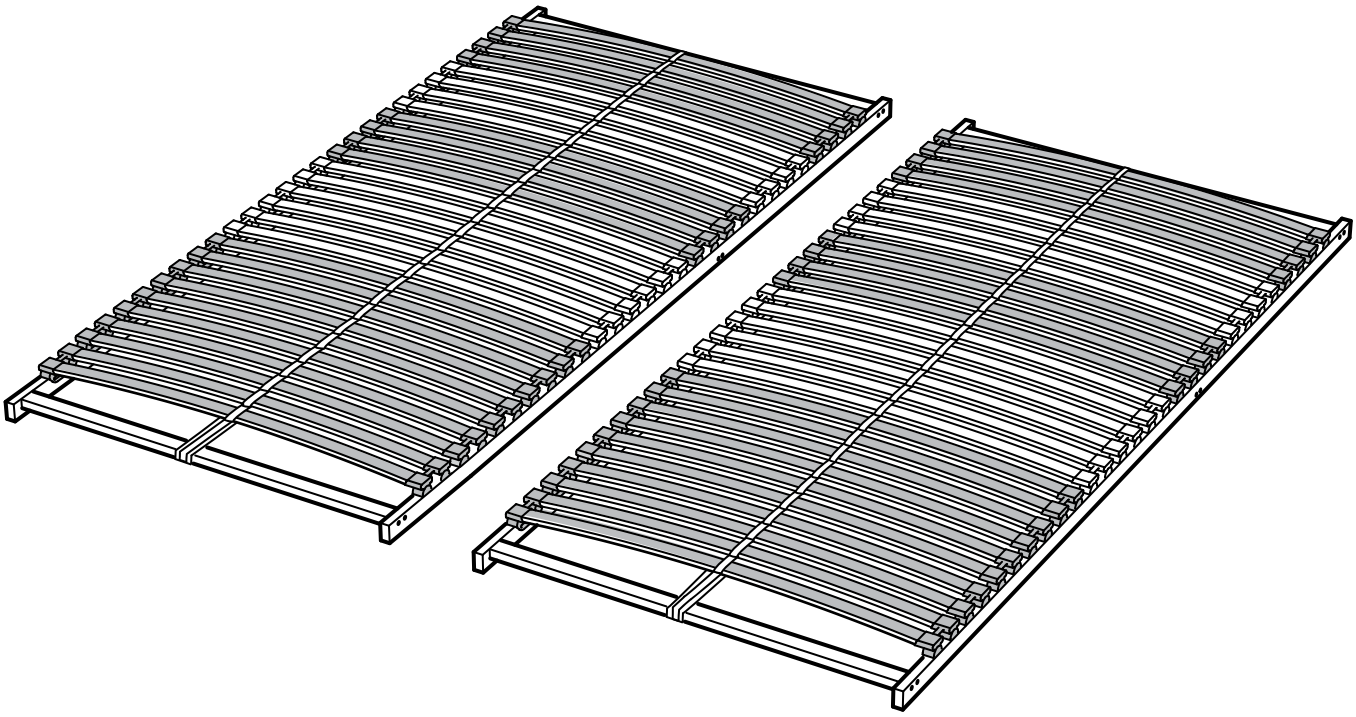

Design and Quality
IKEA of Sweden

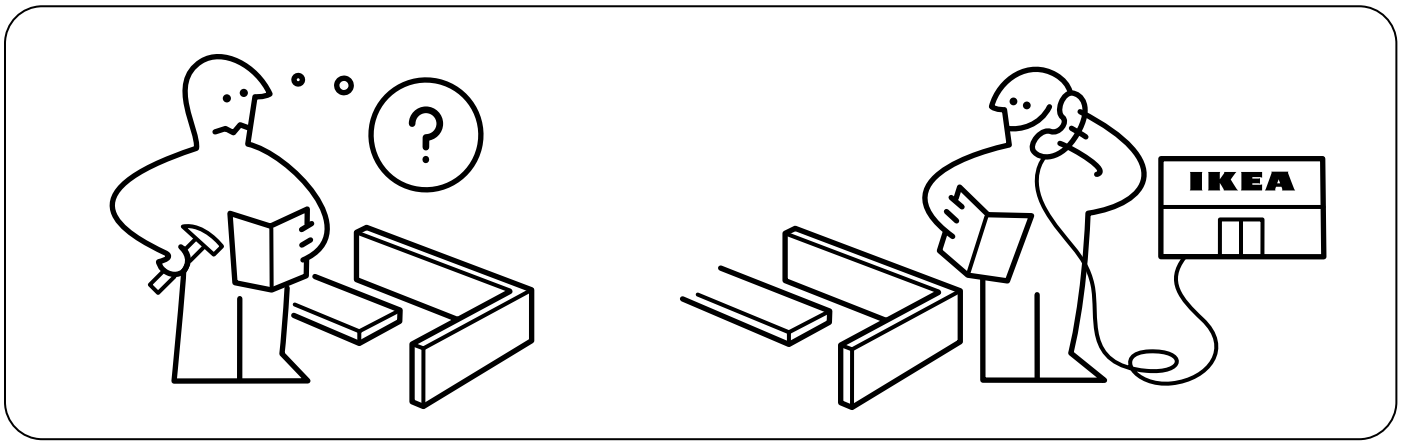
?
IKEA

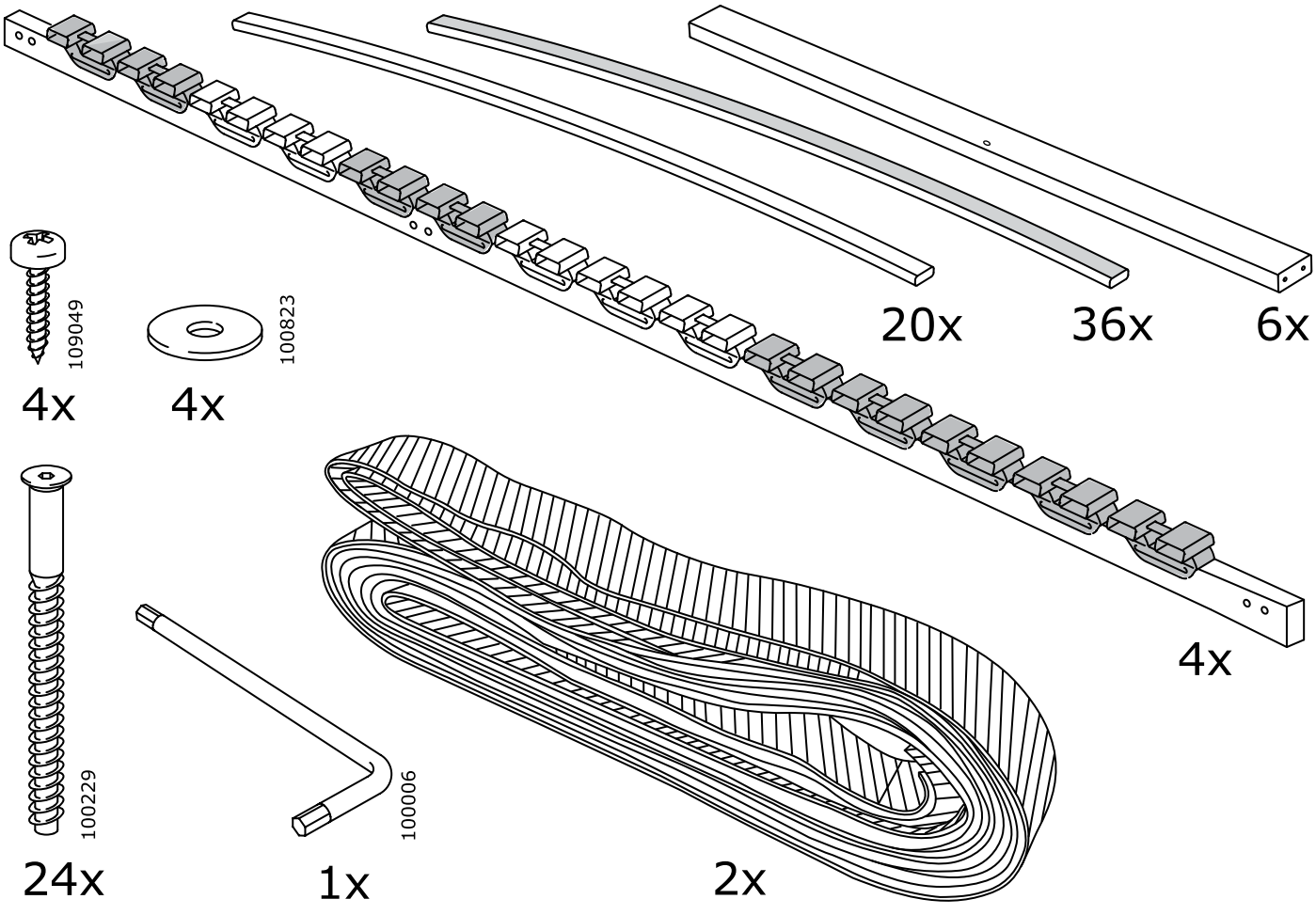
109049
100823
20x
36x
6x
4x
4x
4x
100229
100006
24x
1x
2x

1

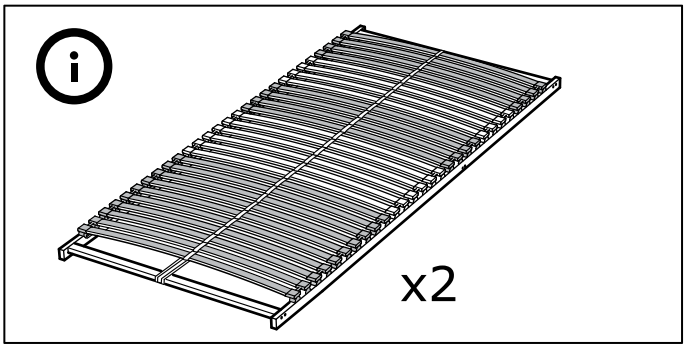

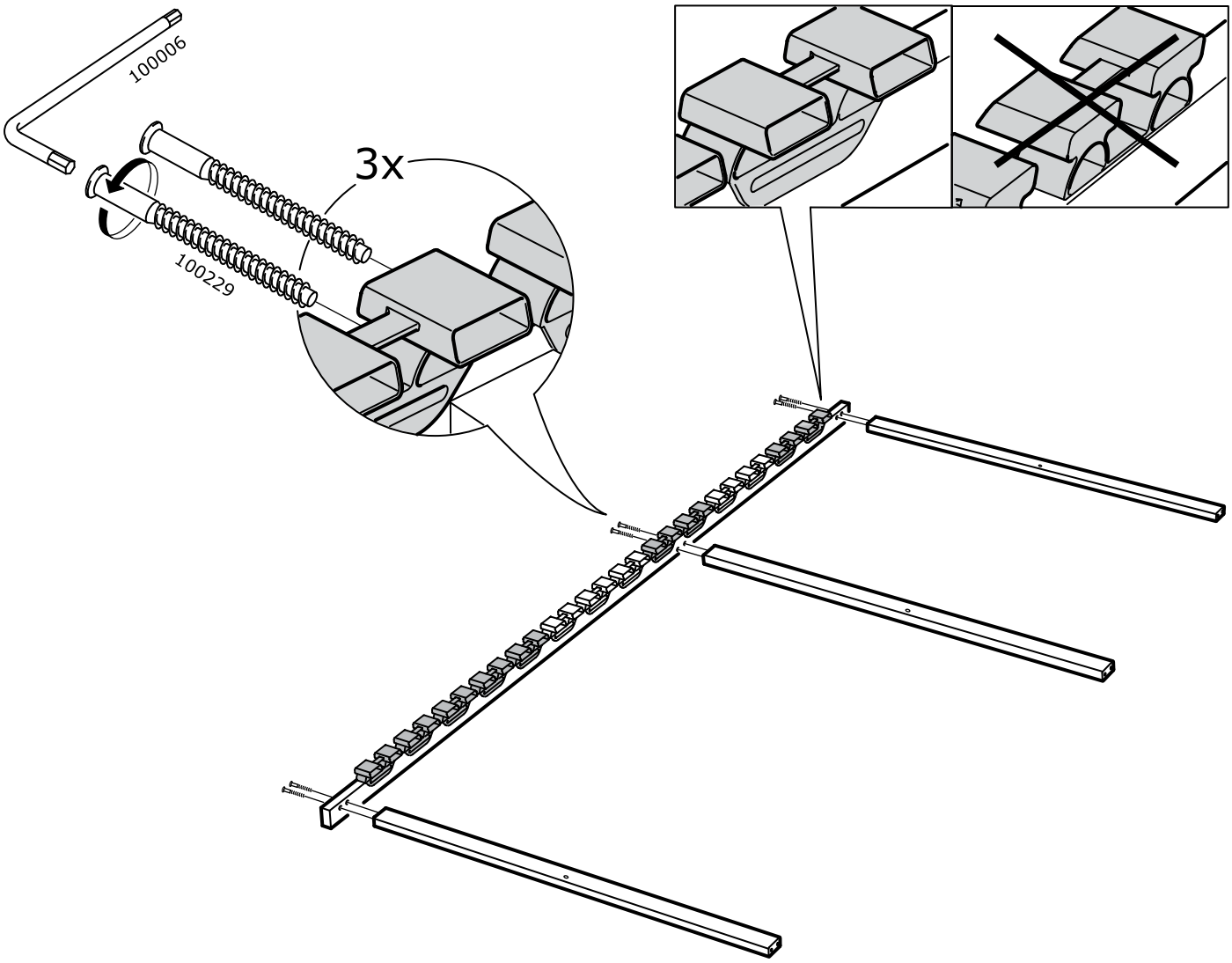

2

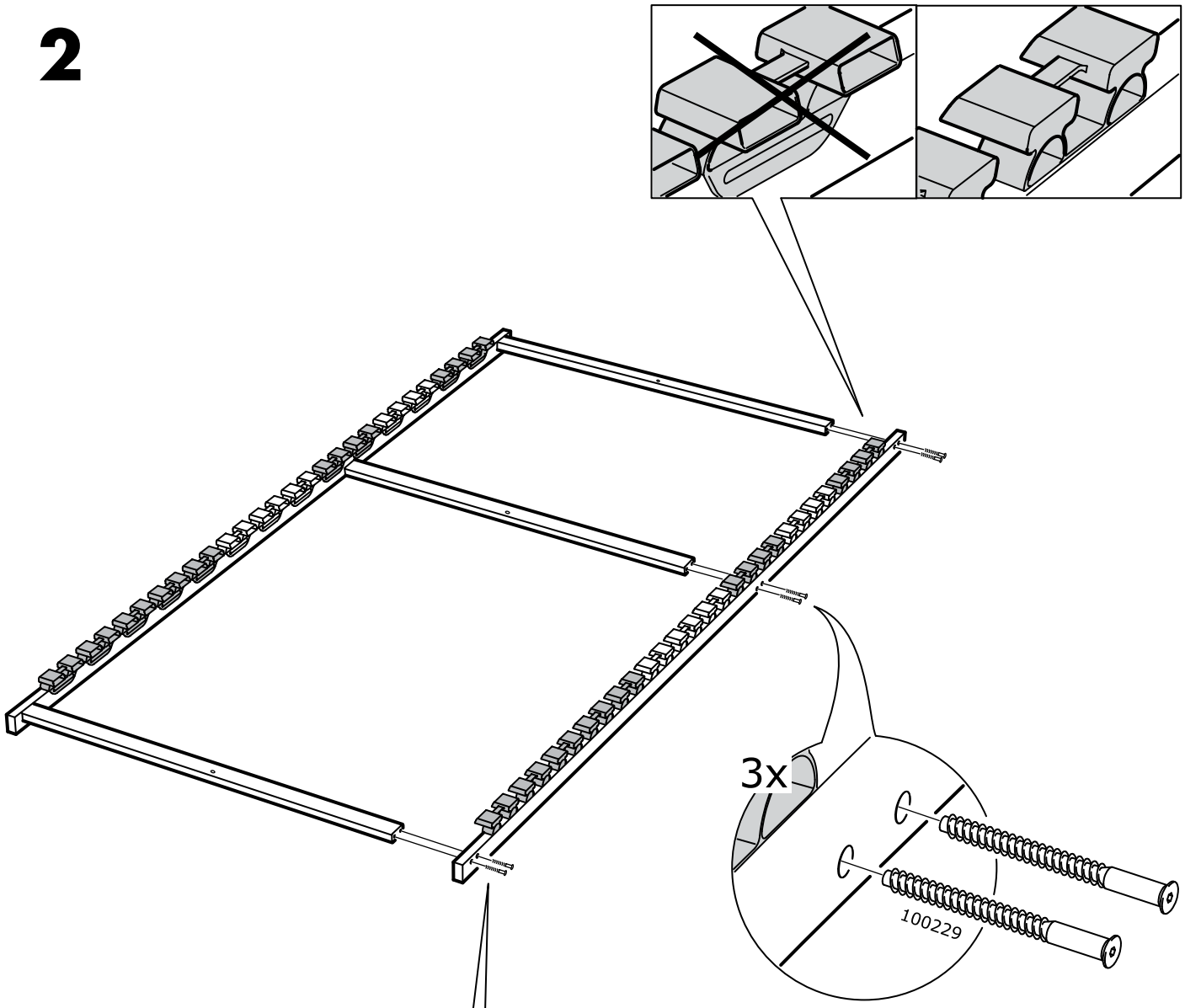

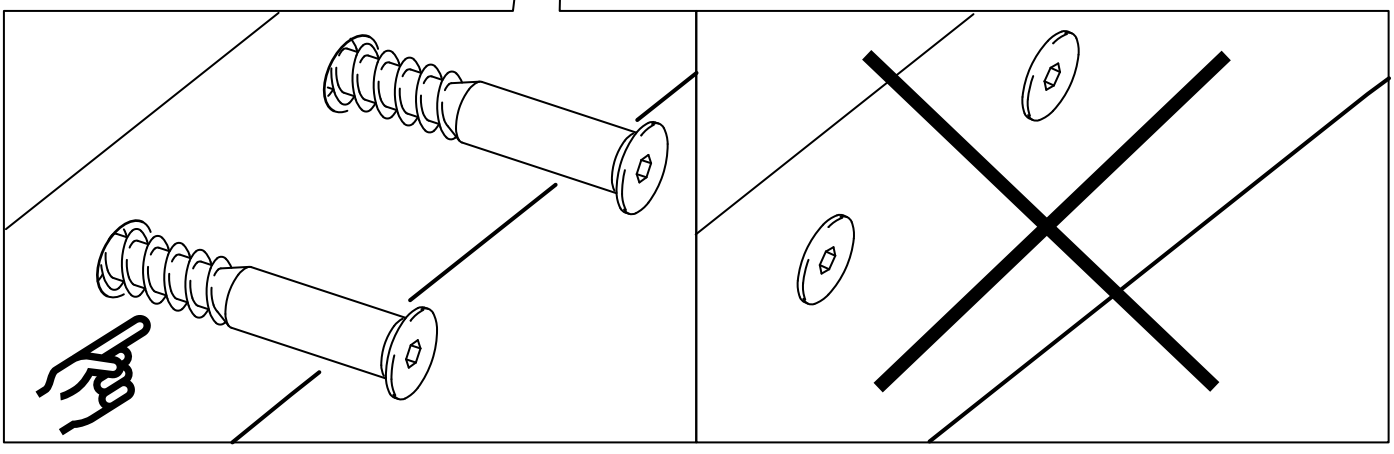

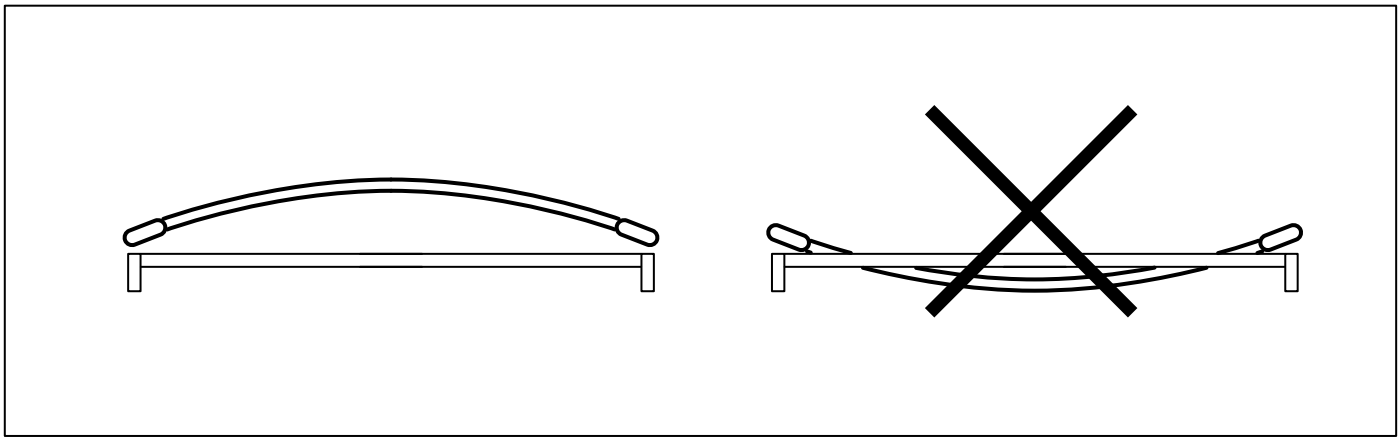

3

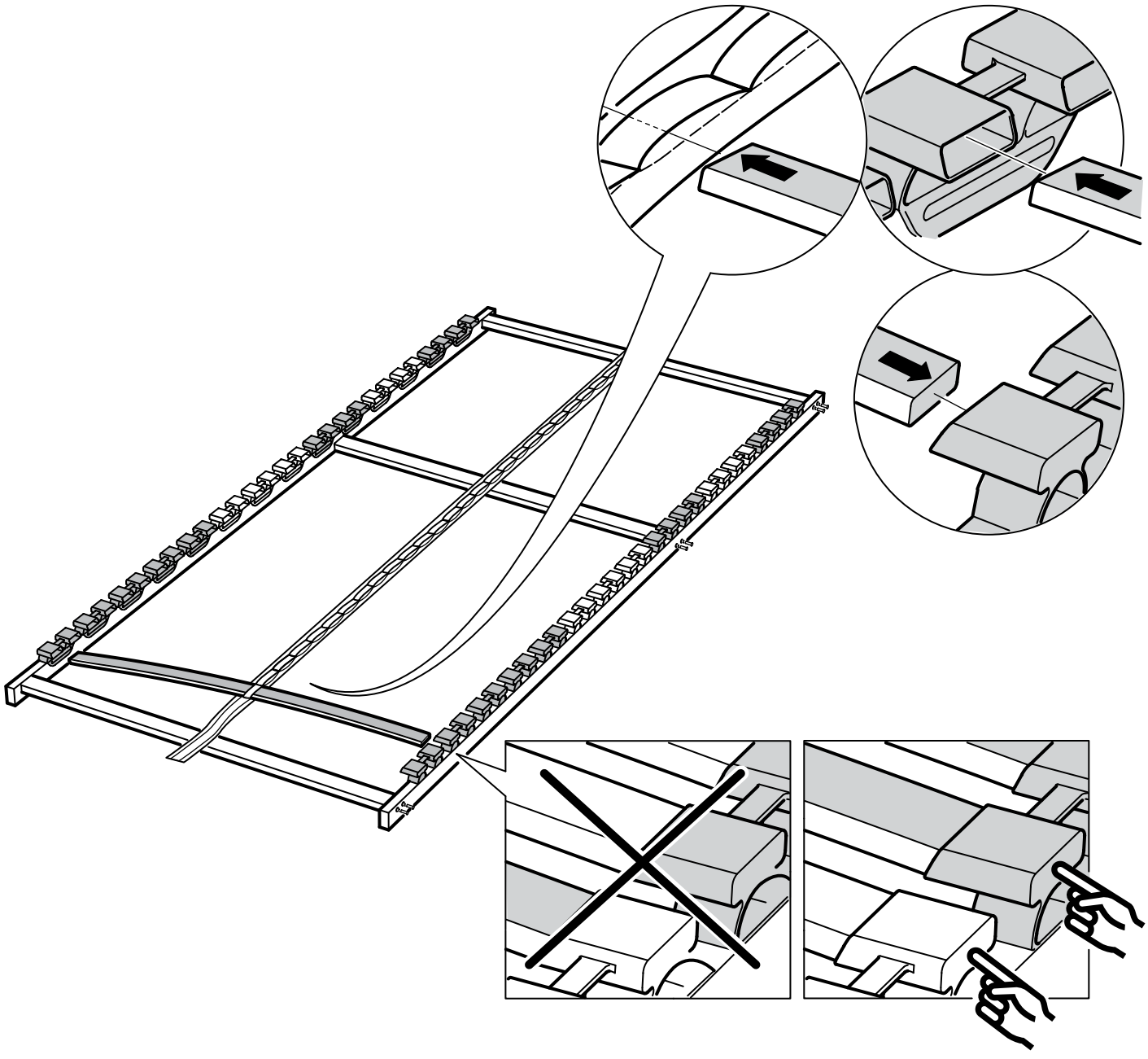

4

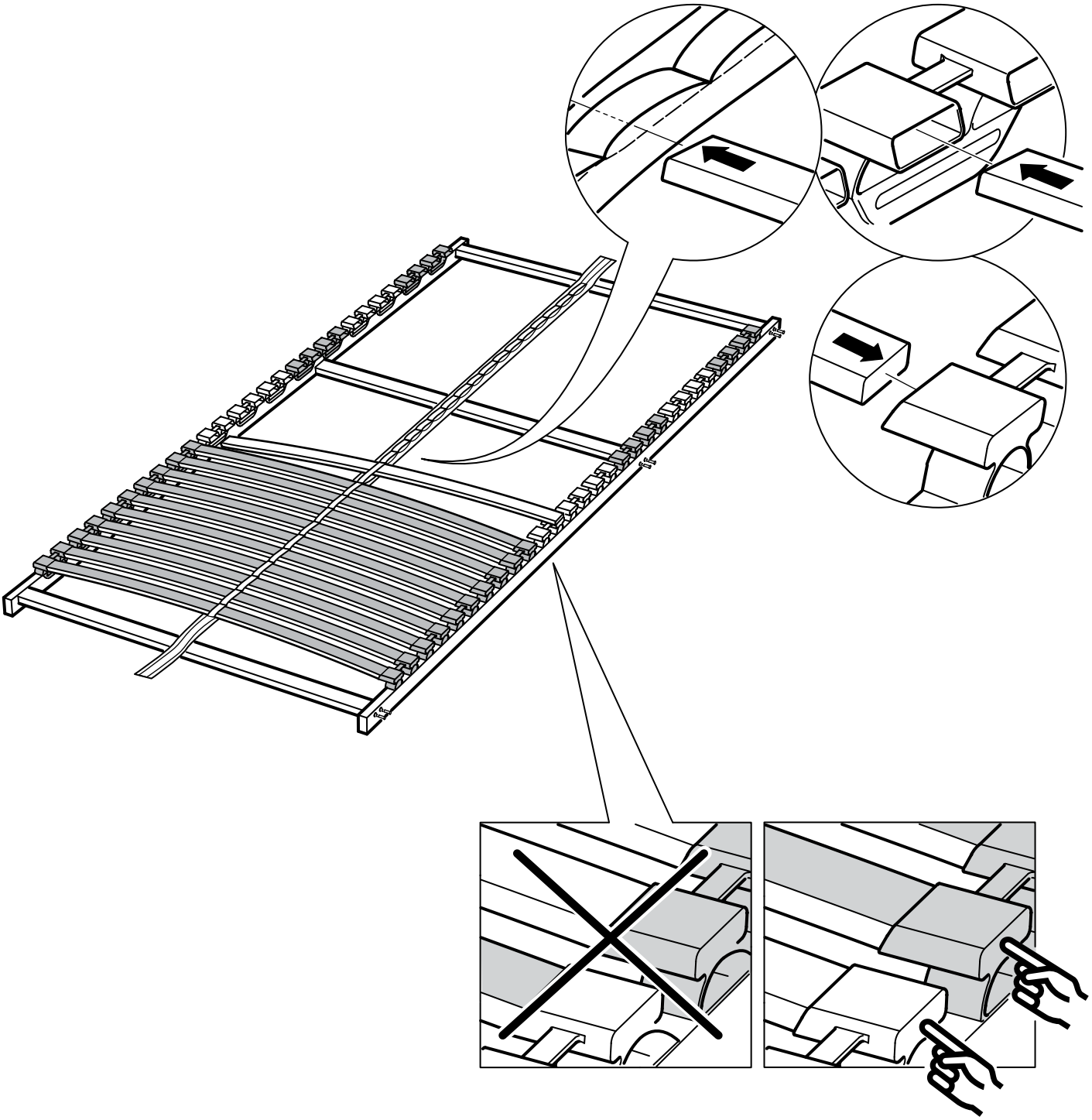

5

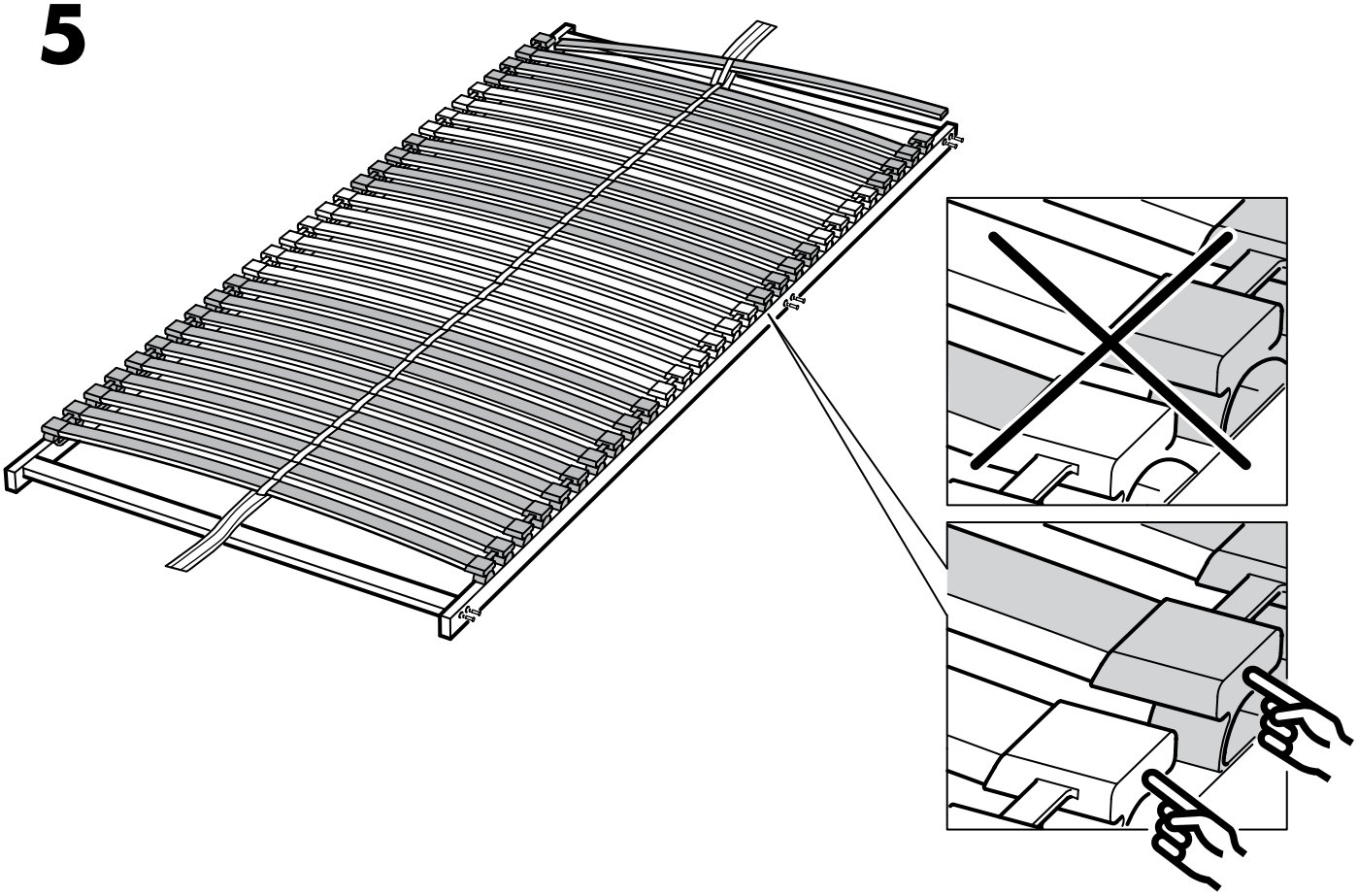

6

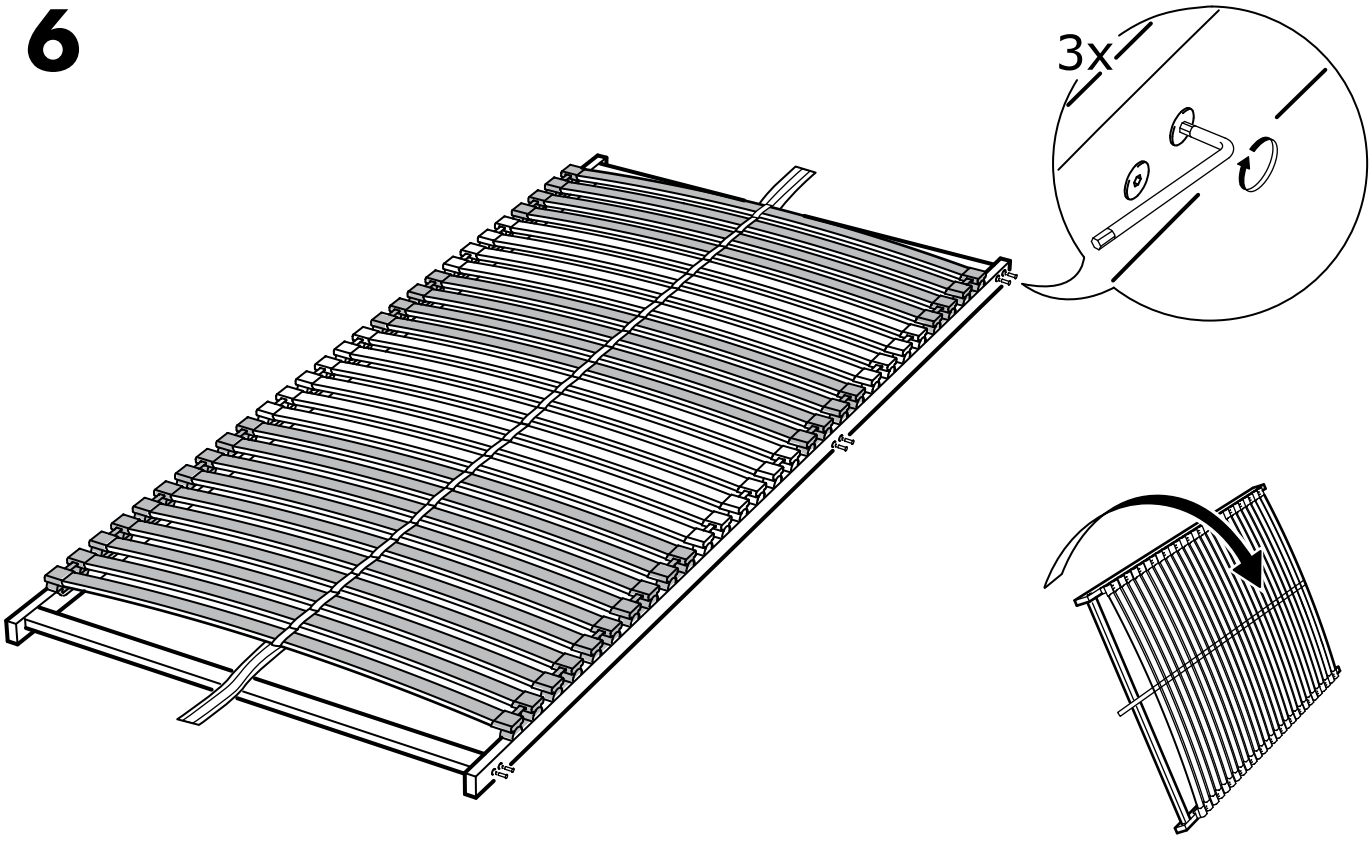

7

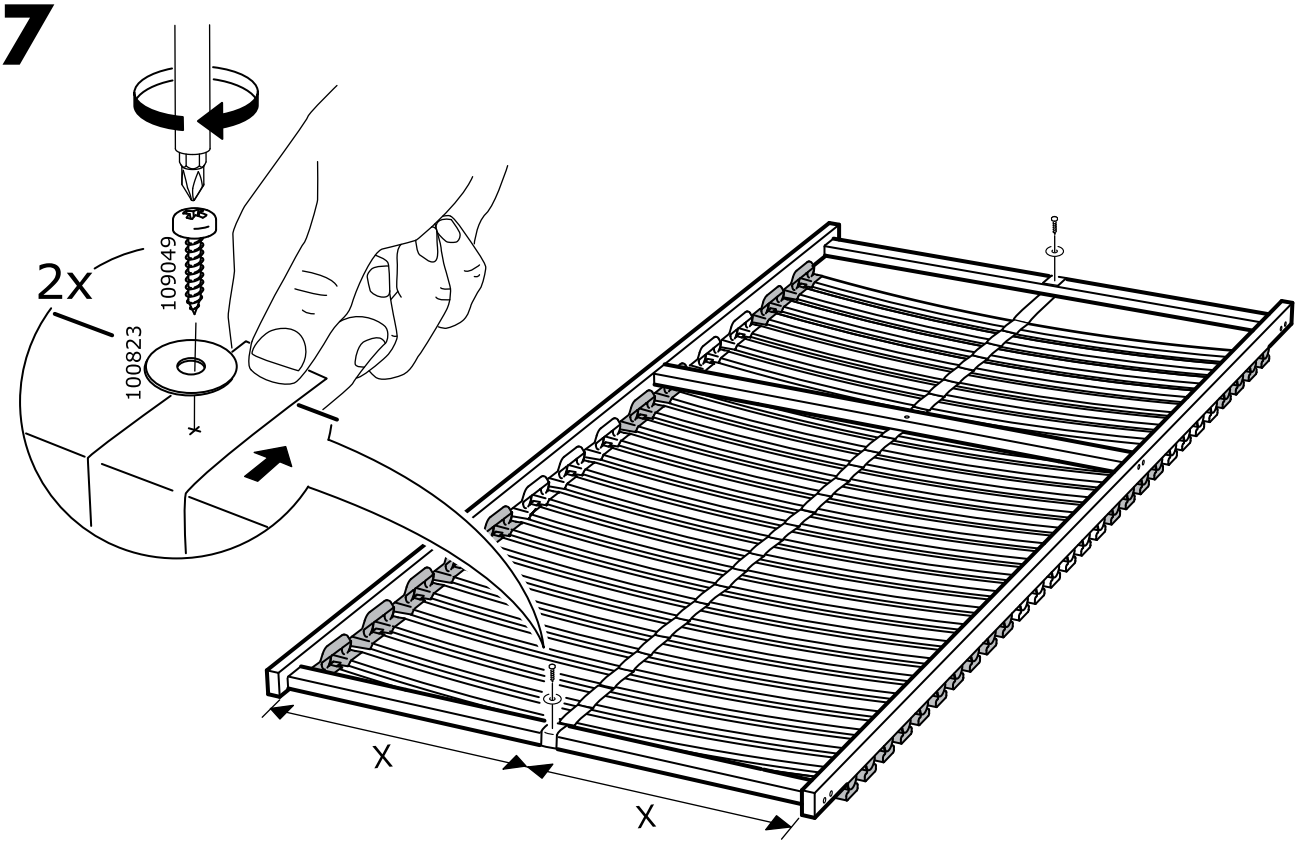

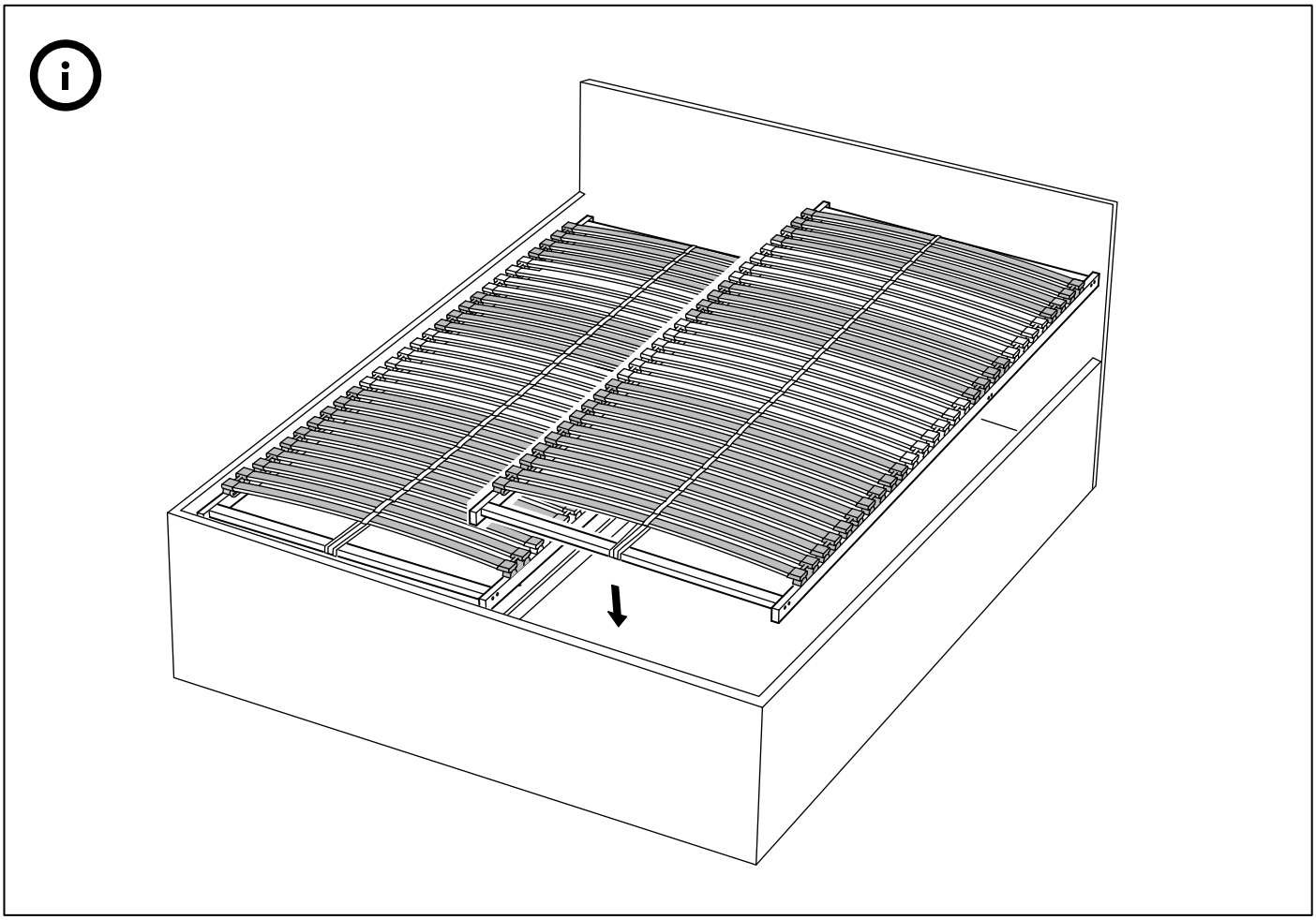

© Inter IKEA Systems B.V. 2014