RUNNEN

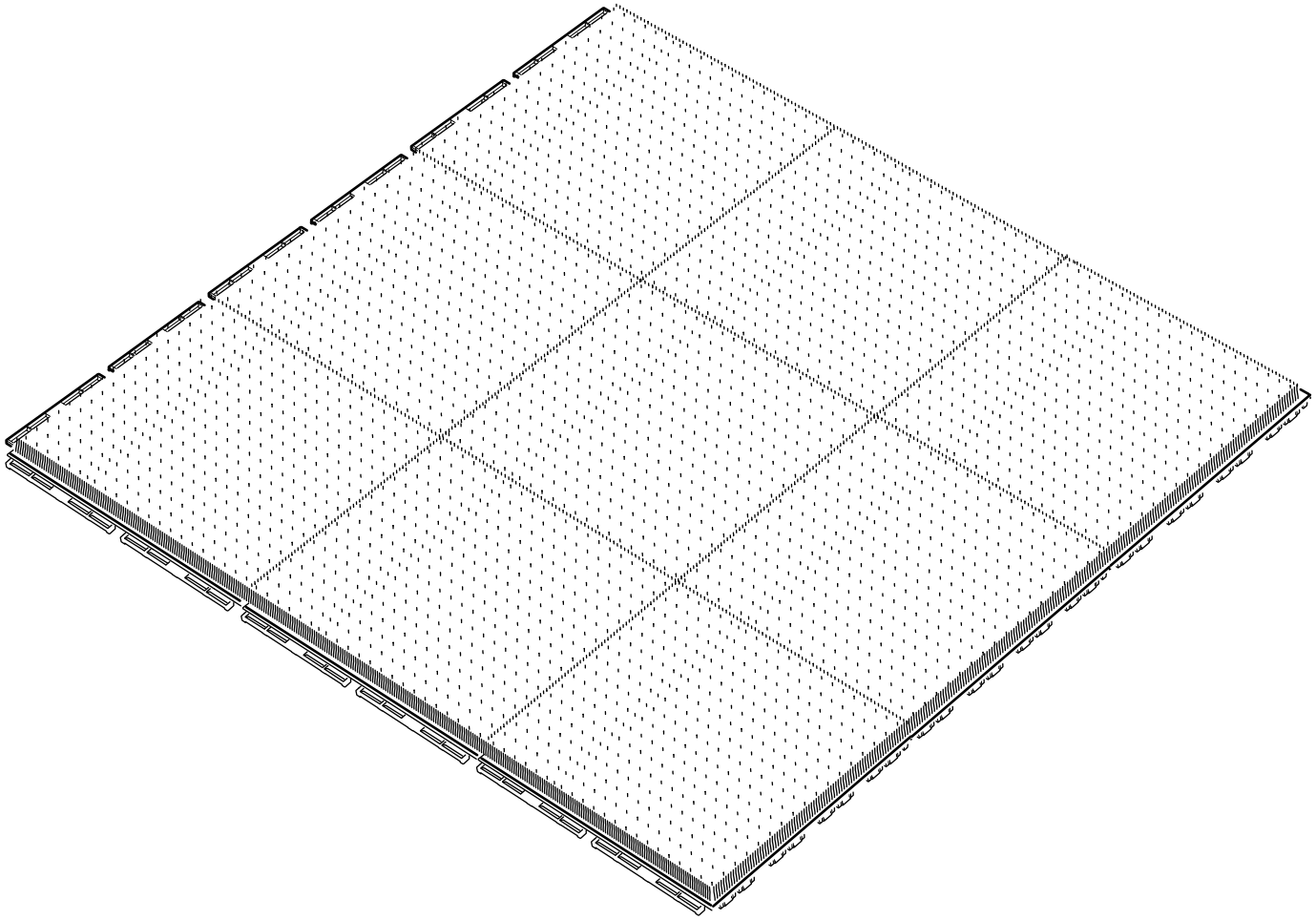

Design and Quality
IKEA of Sweden

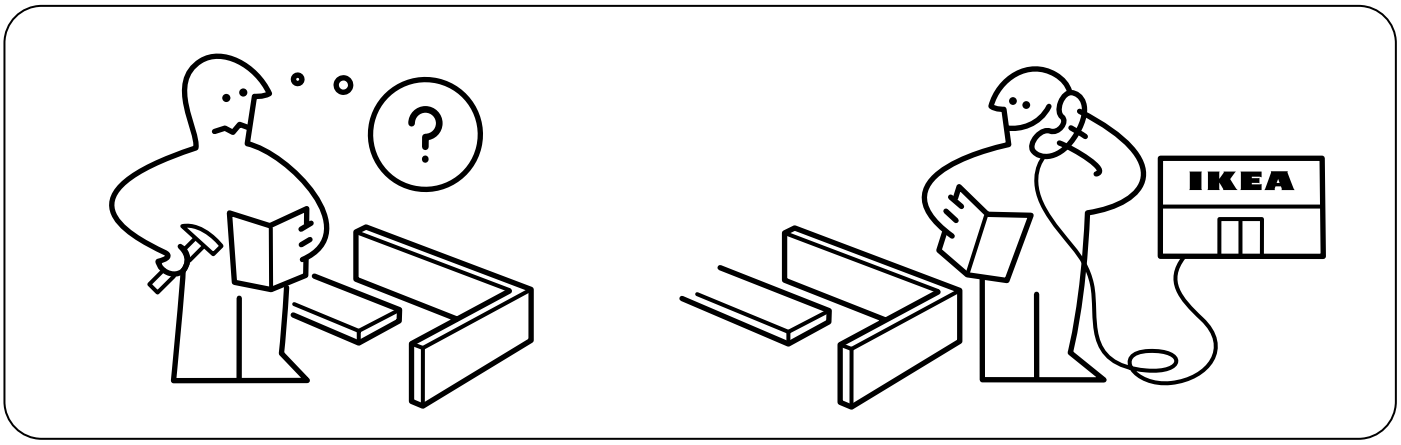

1

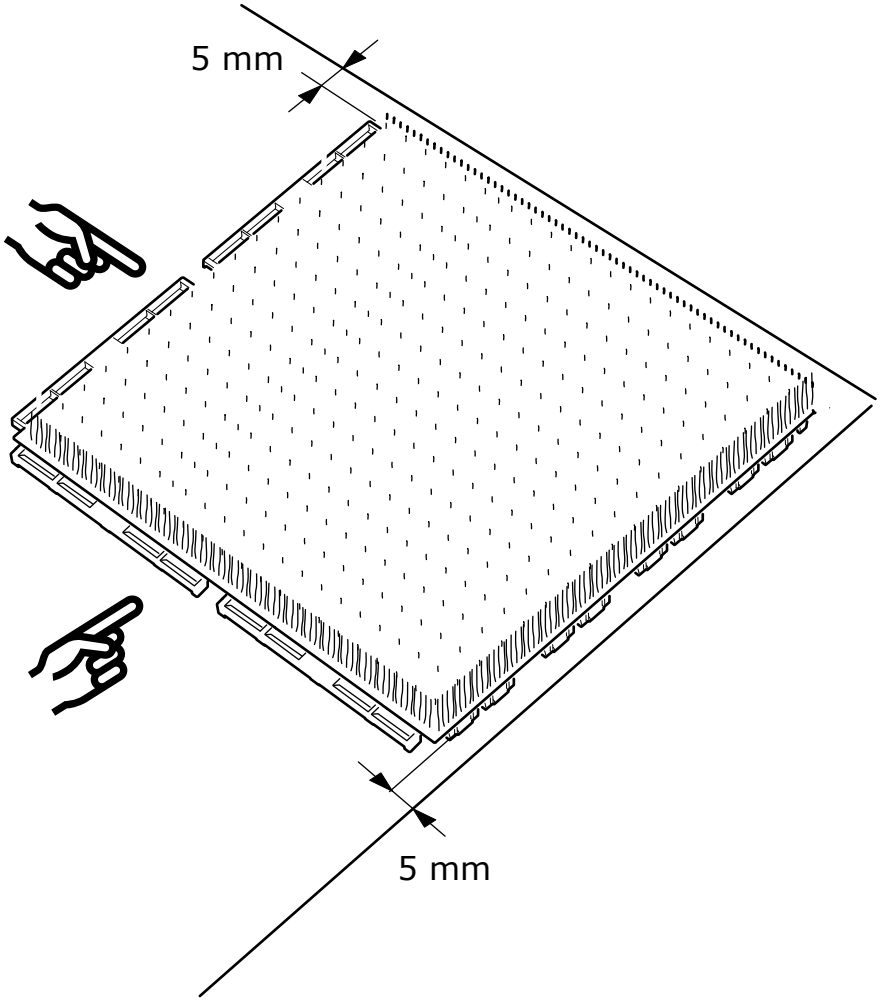

2

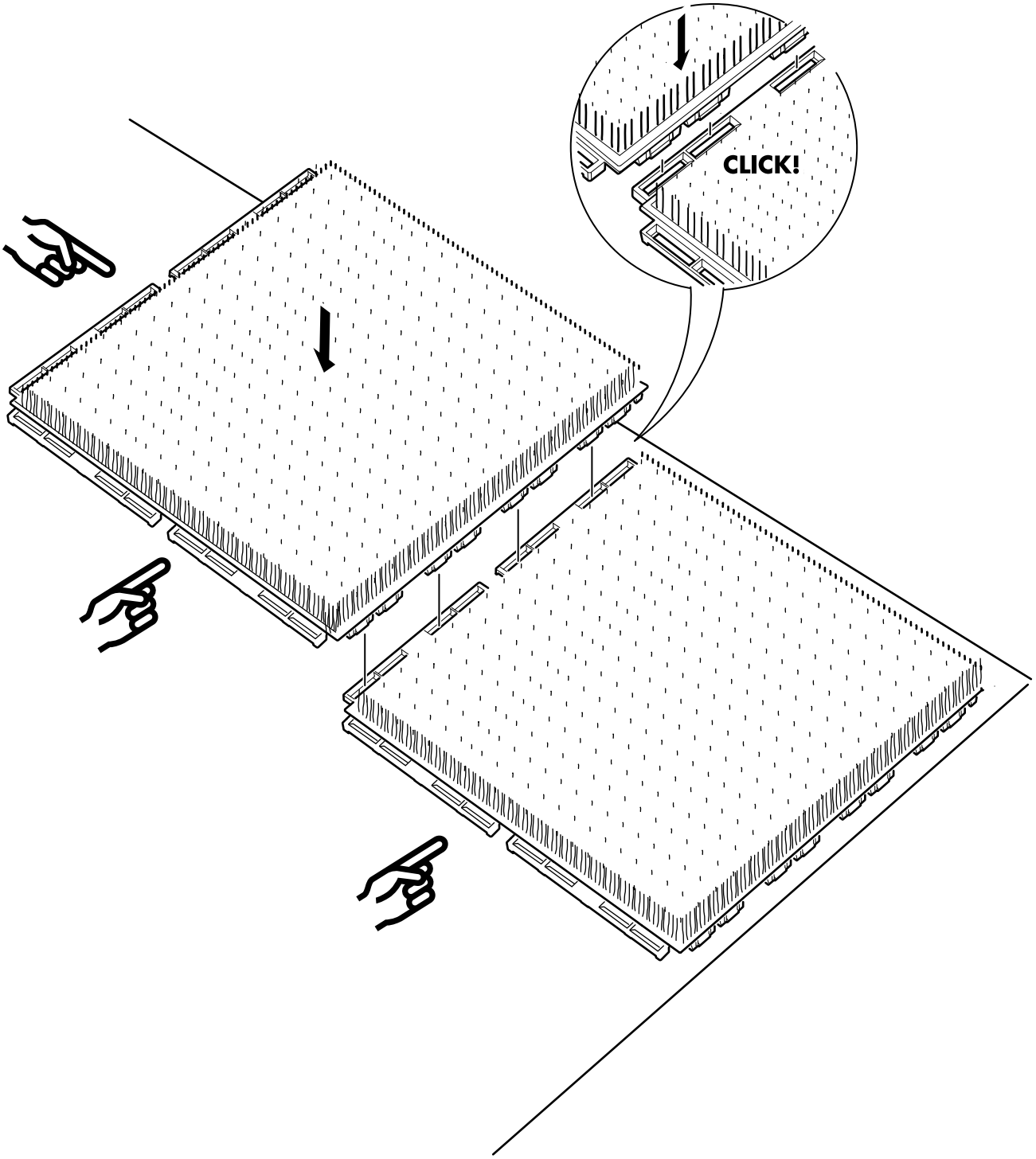

3

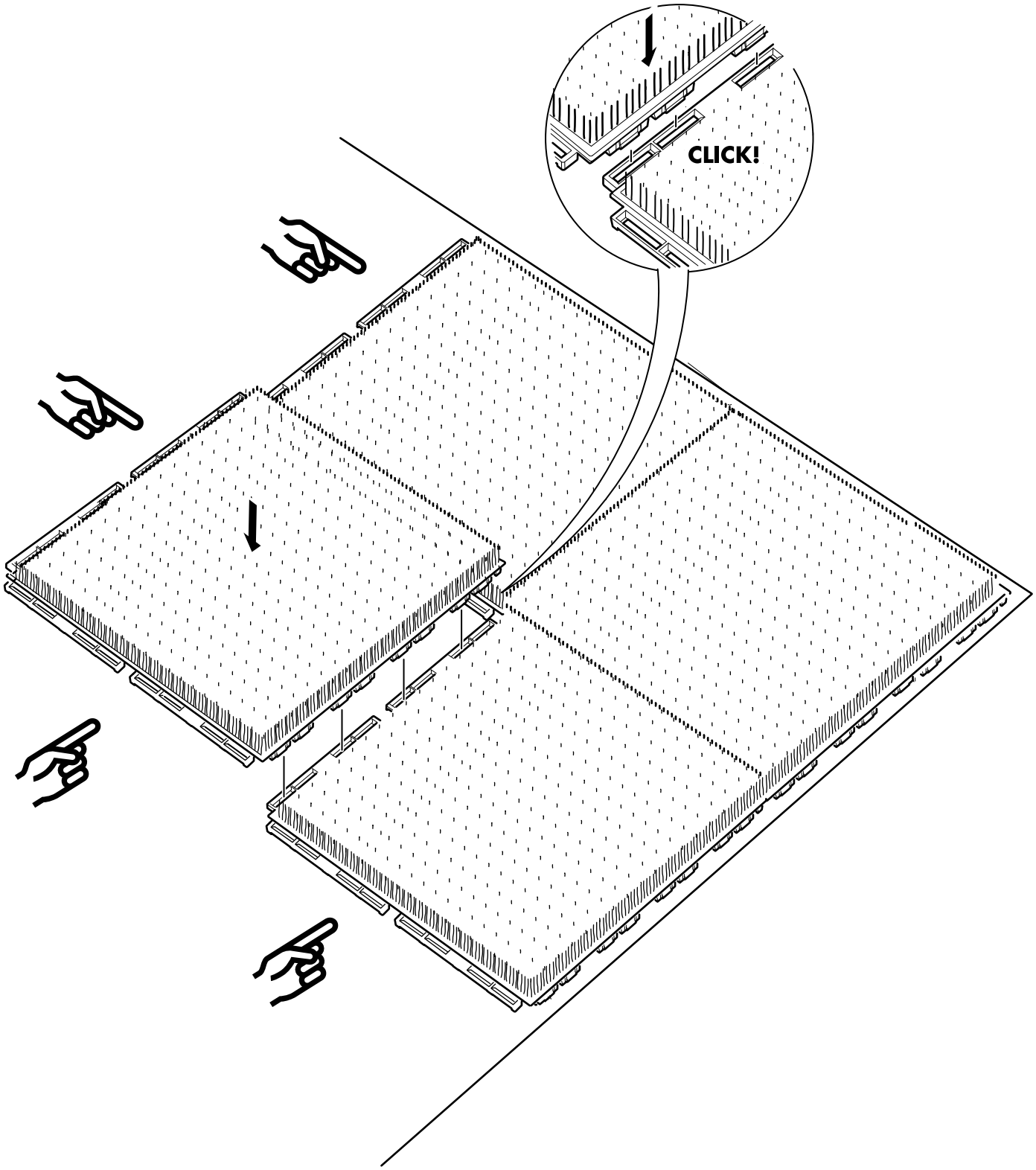

© Inter IKEA Systems B.V. 2017