GLÖMSTA

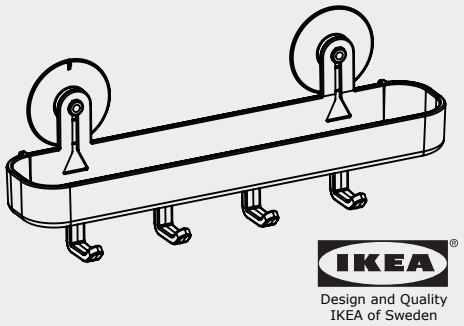

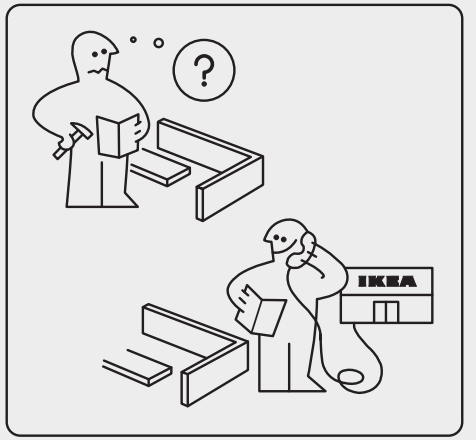

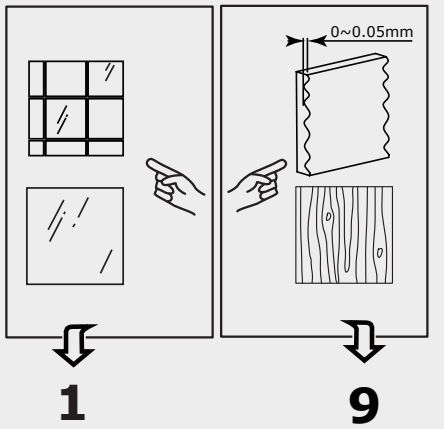

1

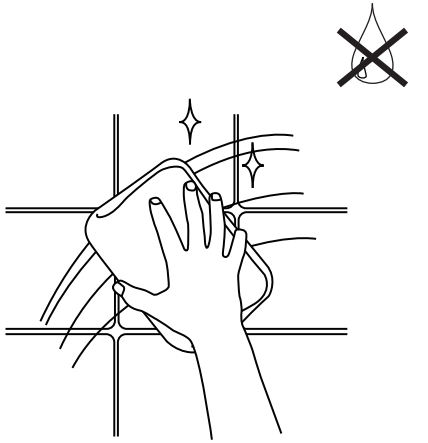

2

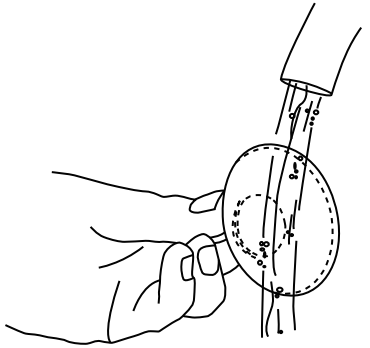

3

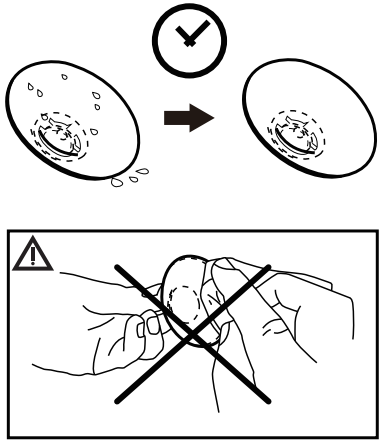

4

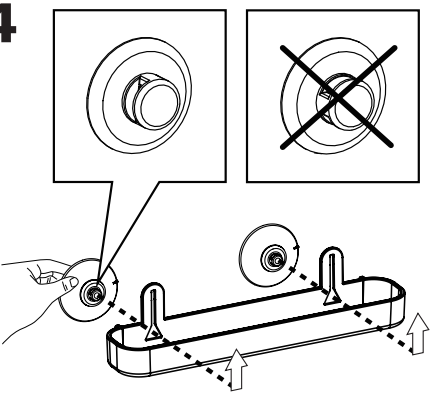

5

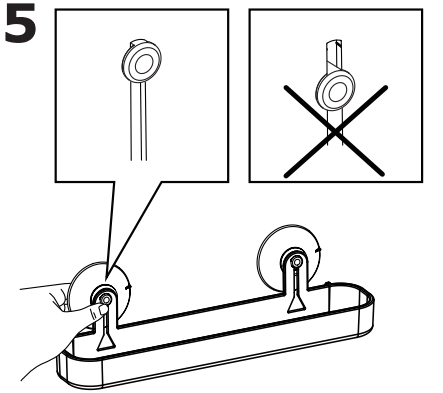

6

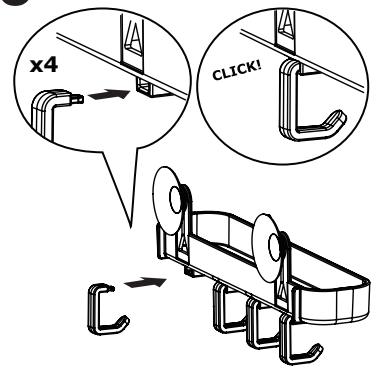

7

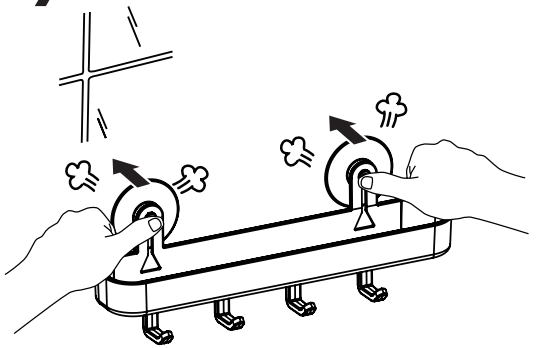

8

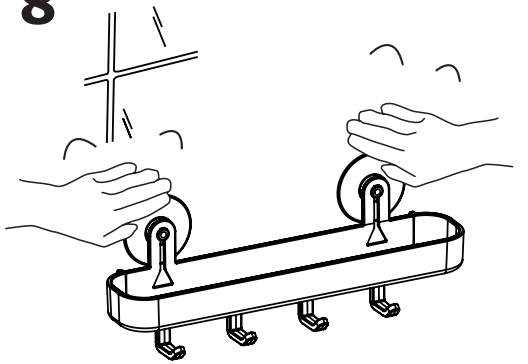

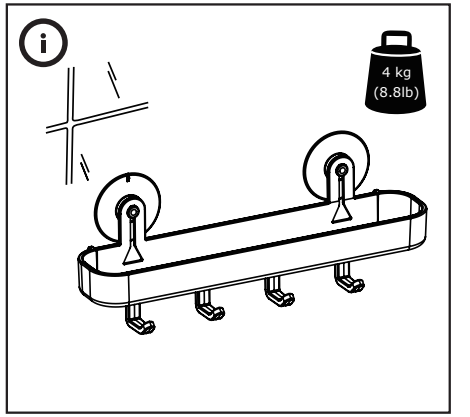

9

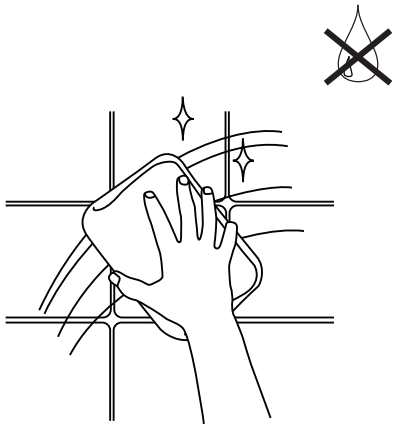

10

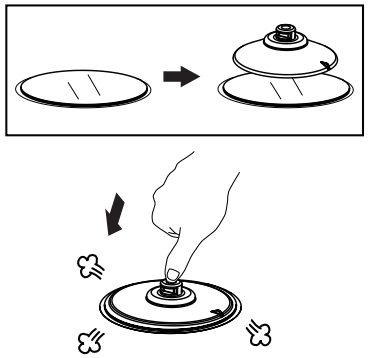

11

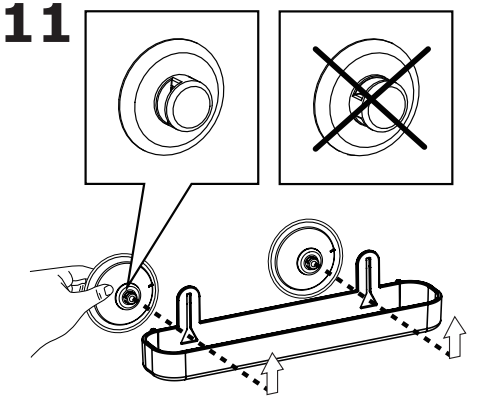

12

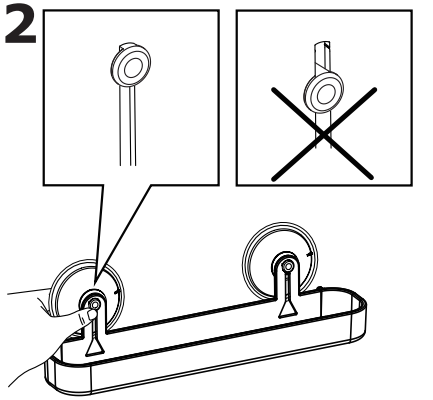

13

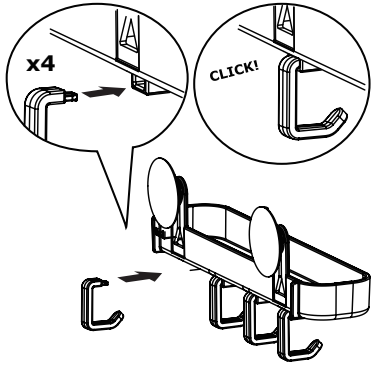

14

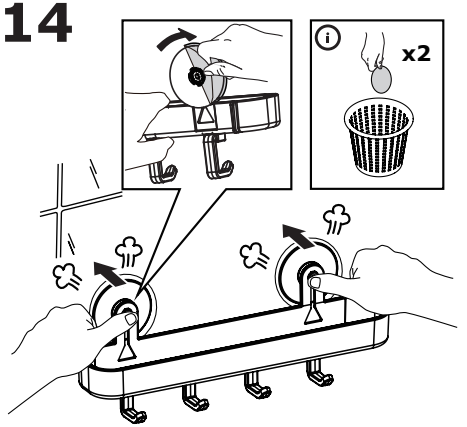

15

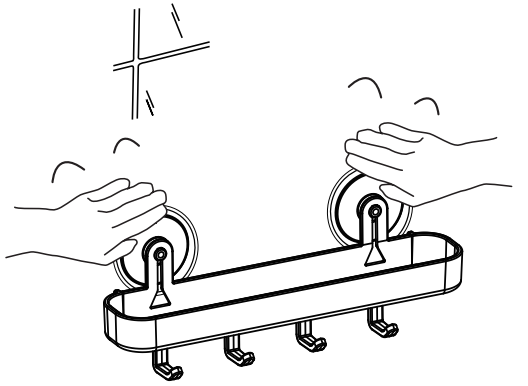

16

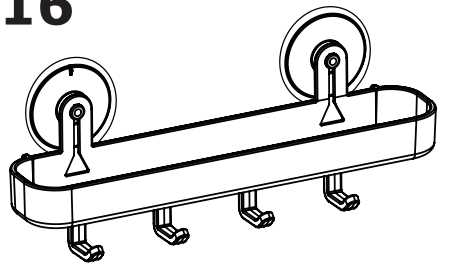

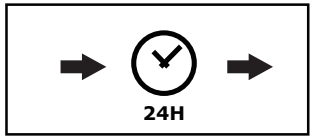

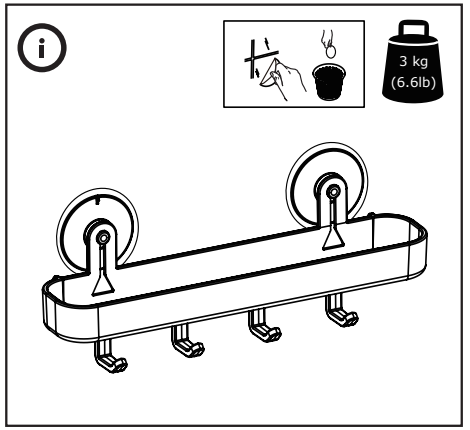

© Inter IKEA Systems B.V. 2016

2016-09-30
AA-1937750-3