RÅDVIKEN

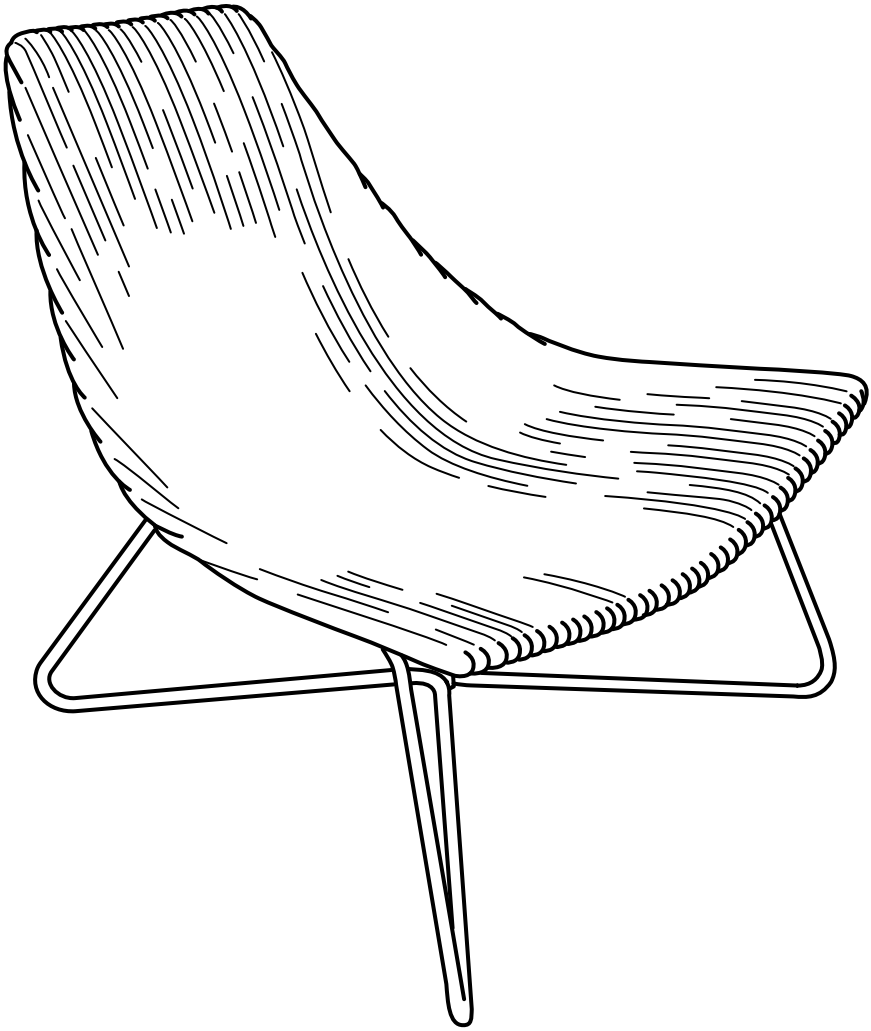

Design and Quality
IKEA of Sweden

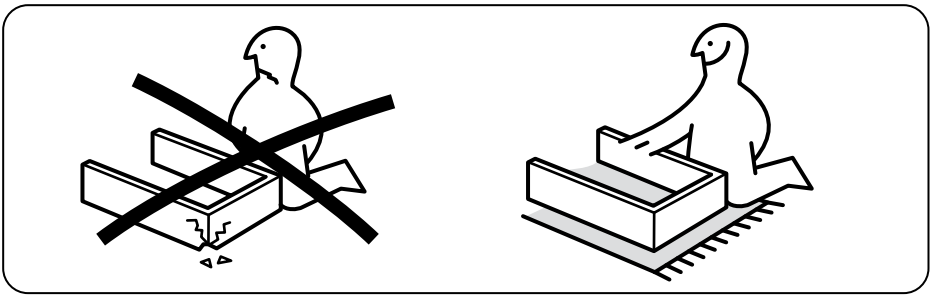

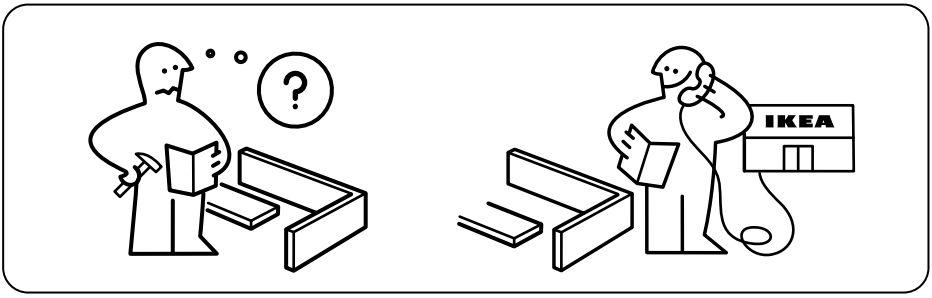

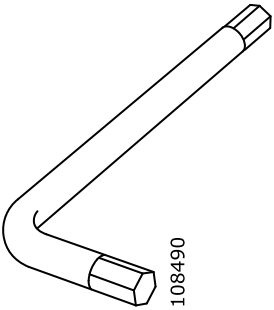

2x

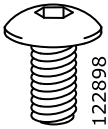

4x

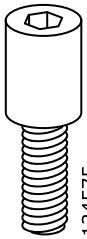

1x

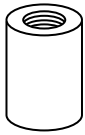

1x

1

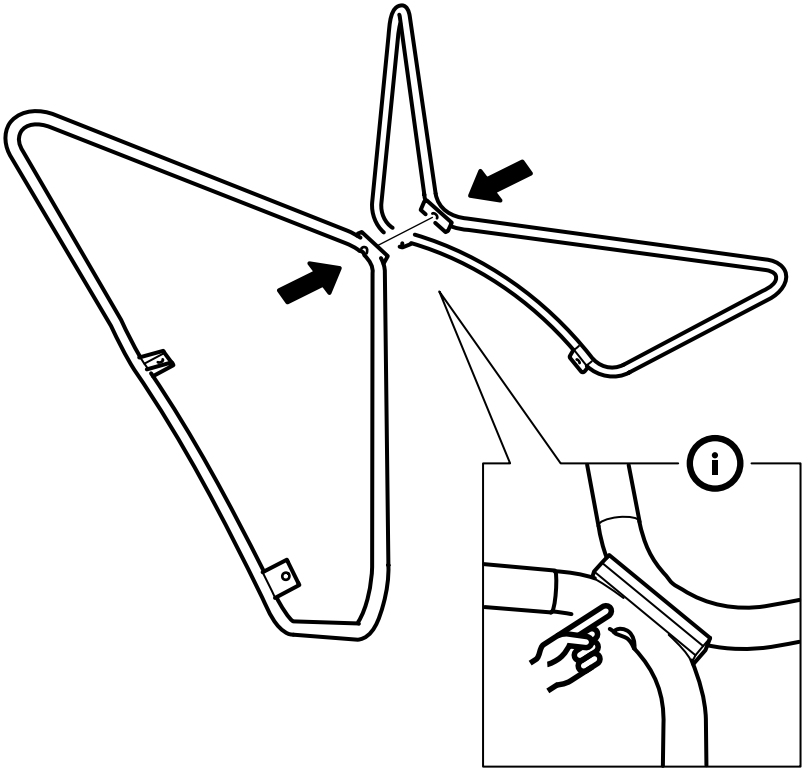

2

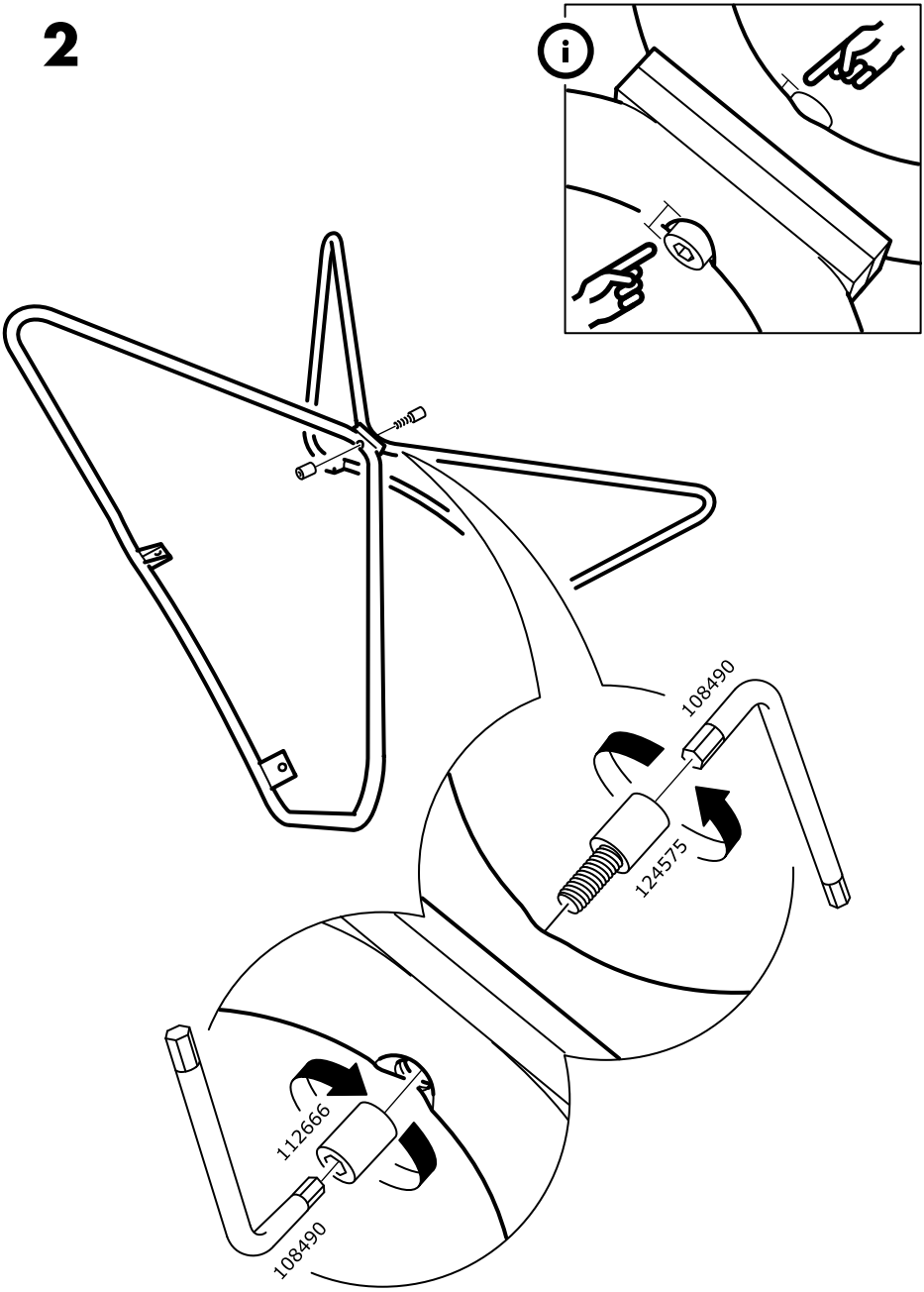

3

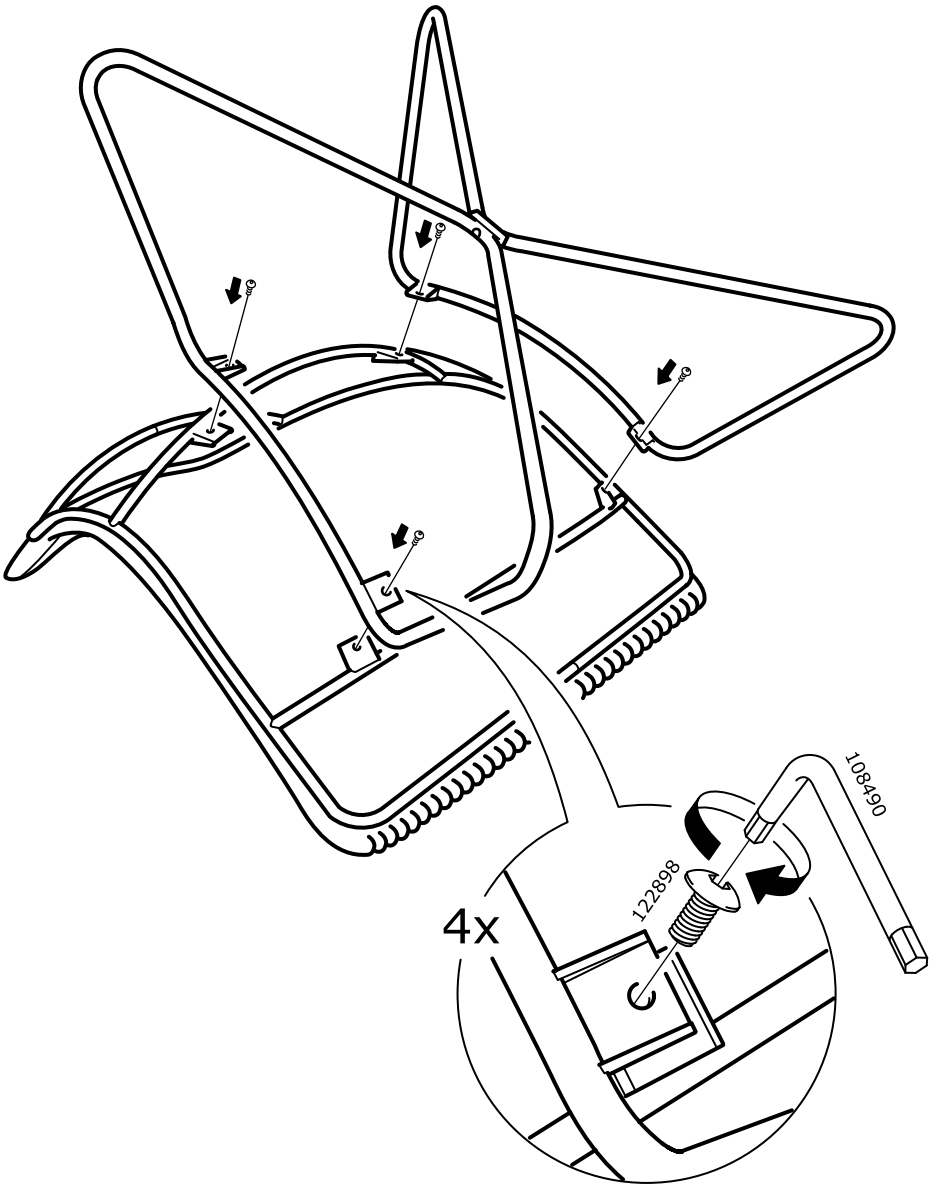

4

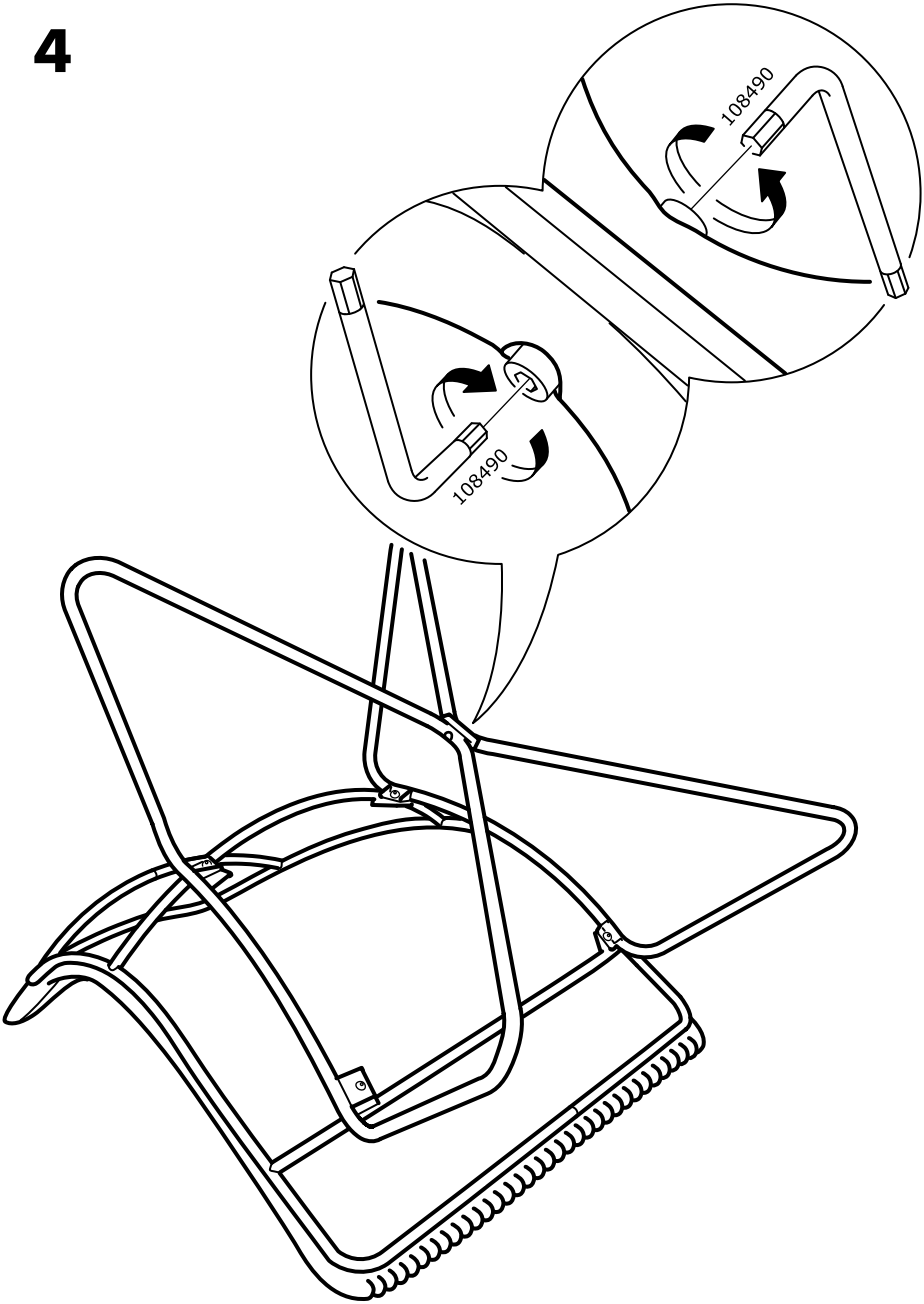

© Inter IKEA Systems B.V. 2014